Volumetric Doser

SCM

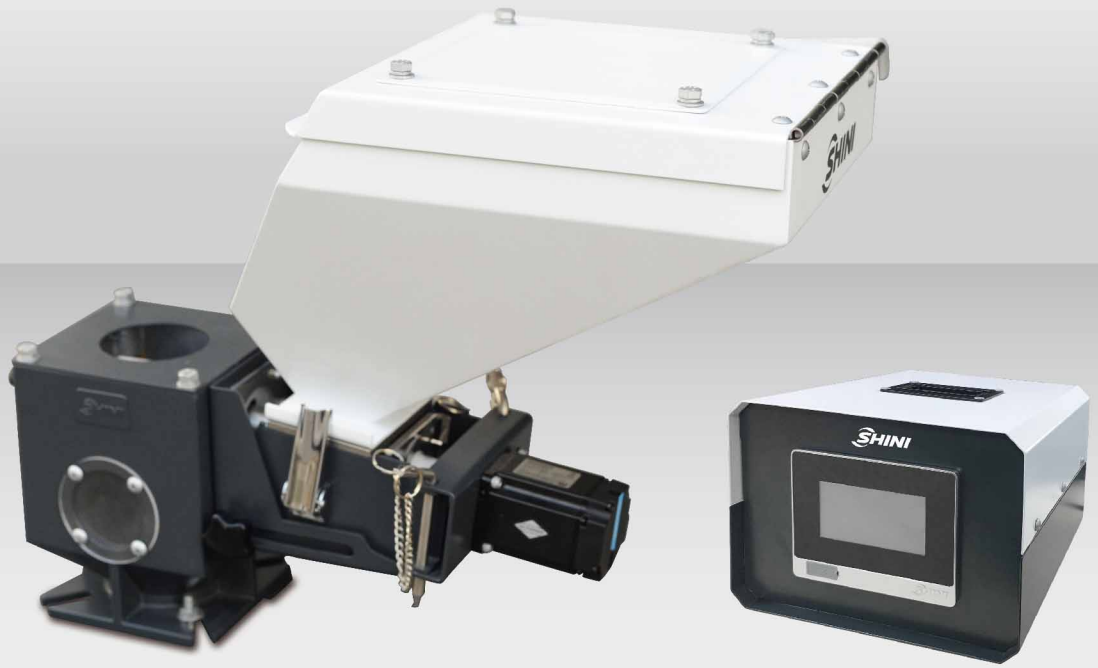

Refer carefully to this manual before operation.

SCM Series

Coding Principle

SCM - x -xx

- xx → Options
- x → D=Double Color Dosers
- SCM → Shini Volumetric Doser

SCM-D

SCM-H

Features

- Adopt high precision servo motor to ensure fast and smooth dosing.
- The throughput with a range of 0.1~130kg/h per screw.
- Easy and user-friendly touch screen control.
- Chrome coating dosing screw for longer durability.
- Modular design for easy color change and maintenance;
- Synchronize of masterbatch dosing ratio with extruder speed in the extrusion mode.
- Uninterrupted production recovery in case of power failure.
- Material purge cleaning for easy replacement of masterbatch.
- Up to 50 memory slots for material receipts
- Ability to monitor, alarm, and stop the unit during the masterbatch blockage via overload
- Support micro-dosing mode; masterbatch will dose once per X cycle.
- The high temp. volumetric doser with water cooling tank can process materials reaching 180℃ drying temp.
- Modbus RTU data communication via RS485.

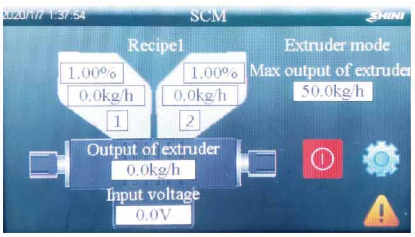

Extrusion mode

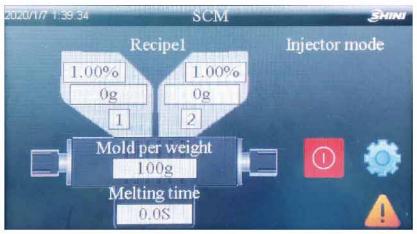

Injection mode

Application

SCM series volumetric doser is suitable for injection molding and extrusion blow molding occasions, which can be used for auto proportional mixing of virgin materials, regrinds, masterbatch, or additives. The injection molding mode supports multiple external signal input modes. The dual-doser is available for multiple component applications. SCM can work with the Venturi Loader VL to realize the auto conveying of the masterbatch to the dosing unit.

Working Principle

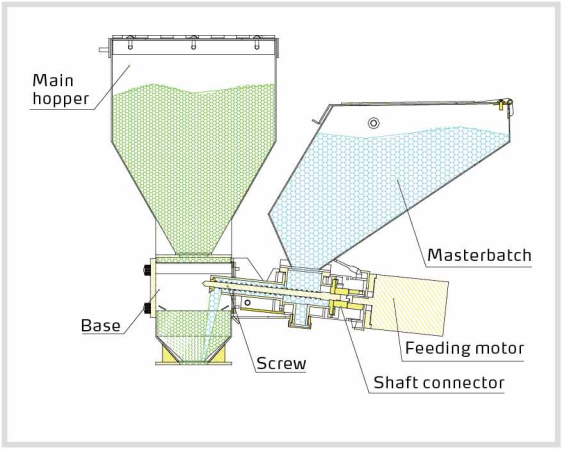

Outline Drawings

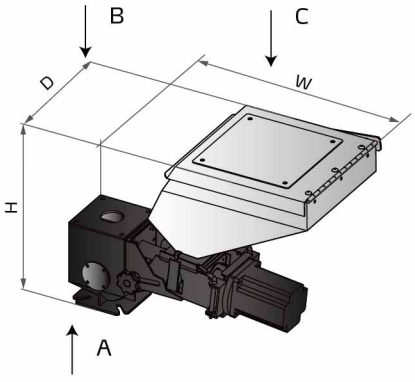

Single Color Doser

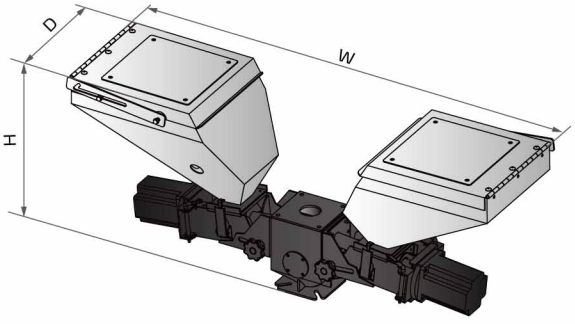

Double-color Doser

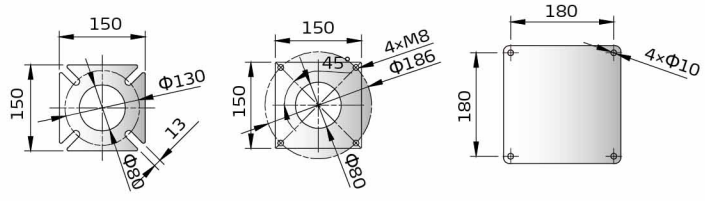

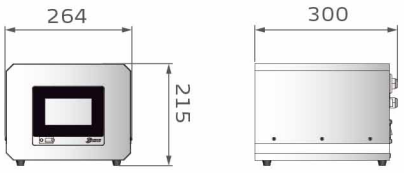

Controal Box

SCM Series

Specifications

Model		Single Color Doser SCM/SCM-H		Double-color Doser SCM-D	
Motor Power (kW,50Hz/60Hz)		0.4		0.4×2	
Screw External Dia.		16mm	0.63"	16mm	0.63"
Output Capacity		0.1~130kg/hr	0.22~286.6lb/hr	0.2~260kg/hr	0.44~573.2lb/hr
Storage Hopper		10L	2.6gal	10L	2.6gal
Dimensions	H	420mm	16.5"	420mm	16.5"
	W	585mm	23"	1030mm	40.6"
	D	300mm	11.8"	300mm	11.8"
Weight		18kg	39.7lb	30kg	66.1lb

Notes:1) The outputs of above models are measured under the conditions of 1.0kg/L bulk density and, masterbatch particles in diameter of 2-3mm by continuous operation. Actual output capacity depends on actual material's characteristics, the actual material, such as bulk density, flow ability, particle size, which is also depended on the setting recipe.

2) Power supply: 1Φ, 230VAC, 50Hz.

Options

Optional masterbatch low-level sensor. Add "LS" at the end of the model code.

Accessories

- Mixer CMB-1 enhances the mixing uniformity

Optional blender

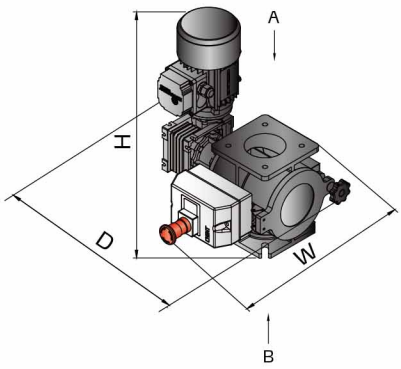

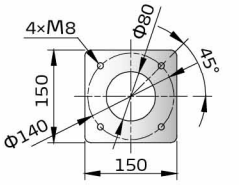

A

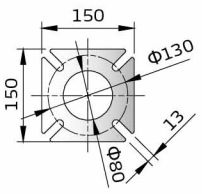

B

Model	Motor power(kw)	H(mm)	W(mm)	D(mm)
CMB-1	0.25	364	347	371

Notes: 1) Power supply: 3Φ, 400VAC, 50Hz.

- Main Material Hopper for customer to add main materials

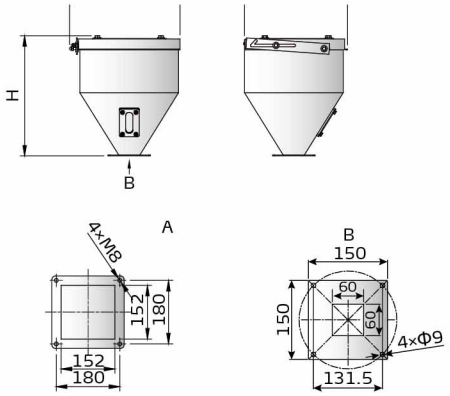

Model	Capacity(L)	Material	H	D	W
MH-15	15	SUS201	340	314	293

- Heavy base(Used with SEHD/SHD-E/SHD-EB-100~300 or SHD-160U~SHD-450U)

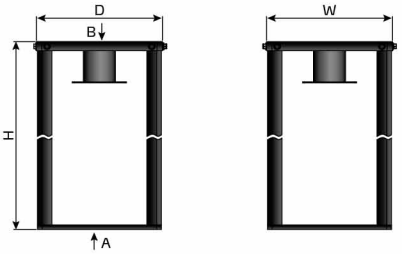

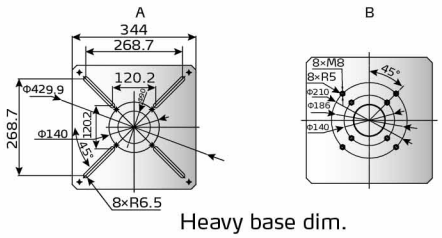

Heavy base dim.

Model	H	D	W
HB-1	326.5	350	350
HB-2	521.5	350	350

Notes: 1) When collocating with standard SCM, the model is HB-1
2) When collocating with standard SCM+CMB-1, the model is HB-2

- Large drying hopper is worked with the heavy base

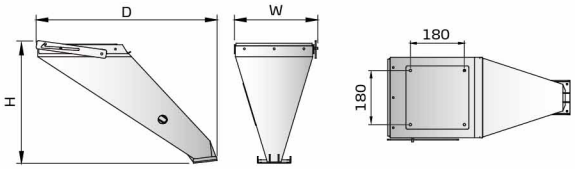

Large drying hopper dim.

Model	Capacity(L)	Material	H	D	W
LH-15	15	SUS201	411	608	281

Shini Group

Addr: No. 23, Minhe St., Shulin Dist.,
New Taipei, Taiwan

Tel: +886 2 2680 9119

Fax: +886 2 2680 9229

Email: shini@shini.com

Factories:

- Taiwan
- Dongguan
- Pinghu
- Ningbo
- Chongqing
- Pune

2021-06-15-04 Copyrights Reserved.